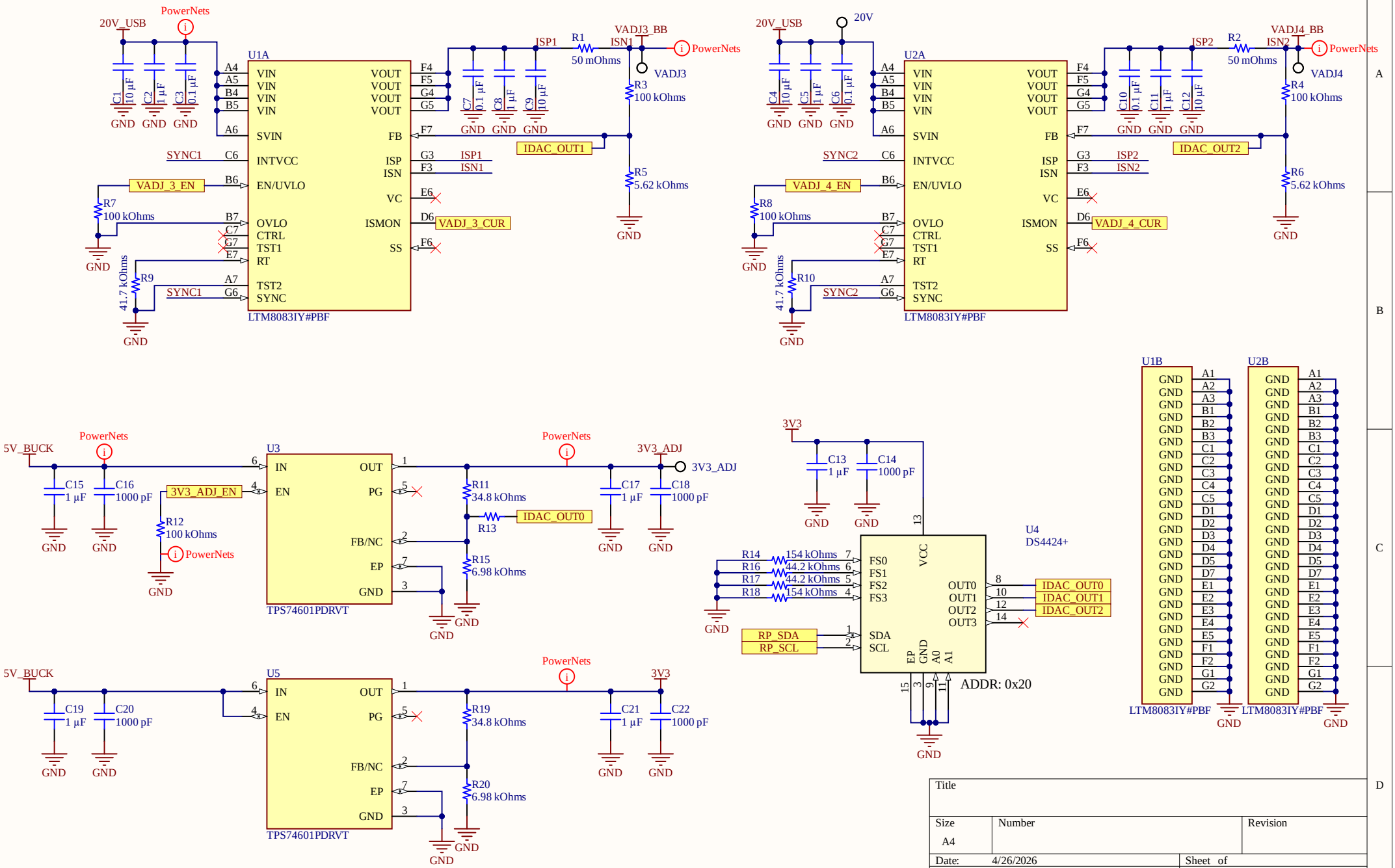
U1A
LTM8083IY#PBF
20V_USB
PowerNets
VADJ3_BB
VADJ3
ISP1
ISN1
R1
50 mOhms
R3
100 kOhms
R5
5.62 kOhms
IDAC_OUT1
SYNC1
VADJ_3_EN
VADJ_3_CUR
R7
100 kOhms
R9
41.7 kOhms
U2A
LTM8083IY#PBF
20V
VADJ4_BB
VADJ4
ISP2
ISN2
R2
50 mOhms
R4
100 kOhms
R6
5.62 kOhms
IDAC_OUT2
SYNC2
VADJ_4_EN
VADJ_4_CUR
R8
100 kOhms
R10
41.7 kOhms
U3
TPS74601PDRVT
5V_BUCK
3V3_ADJ
3V3_ADJ_EN
R12
100 kOhms
R11
34.8 kOhms
R13
IDAC_OUT0
R15
6.98 kOhms
C15
1 µF
C16
1000 pF
C17
1 µF
C18
1000 pF
U5
TPS74601PDRVT
3V3
C19
1 µF
C20
1000 pF
R19
34.8 kOhms
R20
6.98 kOhms
C21
1 µF
C22
1000 pF
U4
DS4424+
C13
1 µF
C14
1000 pF
R14
154 kOhms
R16
44.2 kOhms
R17
44.2 kOhms
R18
154 kOhms
RP_SDA
RP_SCL
ADDR: 0x20
U1B
U2B
LTM8083IY#PBF
LTM8083IY#PBF
GND
Title
Size
A4
Number
Revision
Date:
4/26/2026
Sheet of
File:
C:\Users\..\Power.SchDoc
Drawn By:

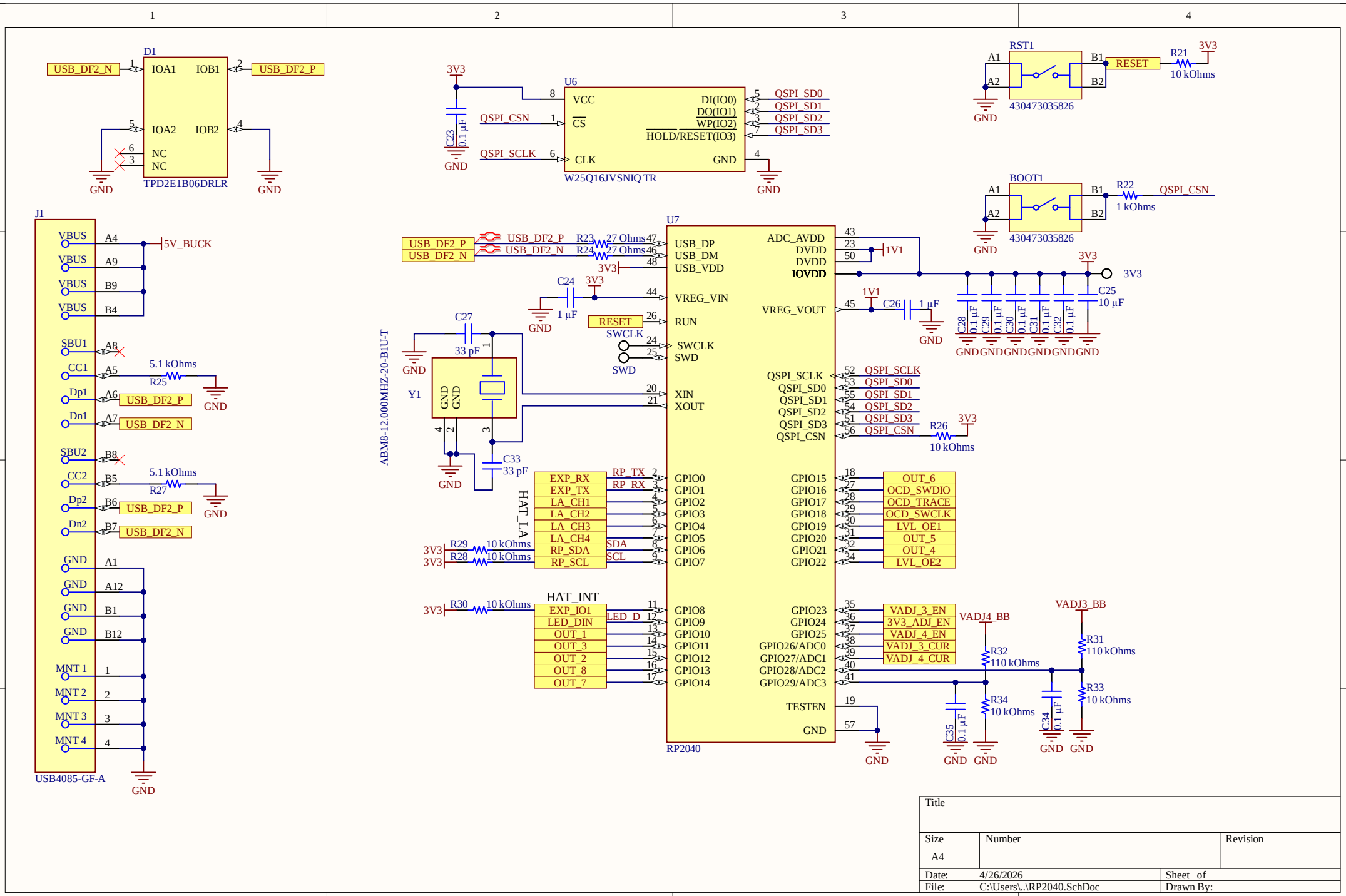

Title		
Size A4	Number	Revision
Date: 4/26/2026		Sheet of
File: C:\Users\..\RP2040.SchDoc		Drawn By:

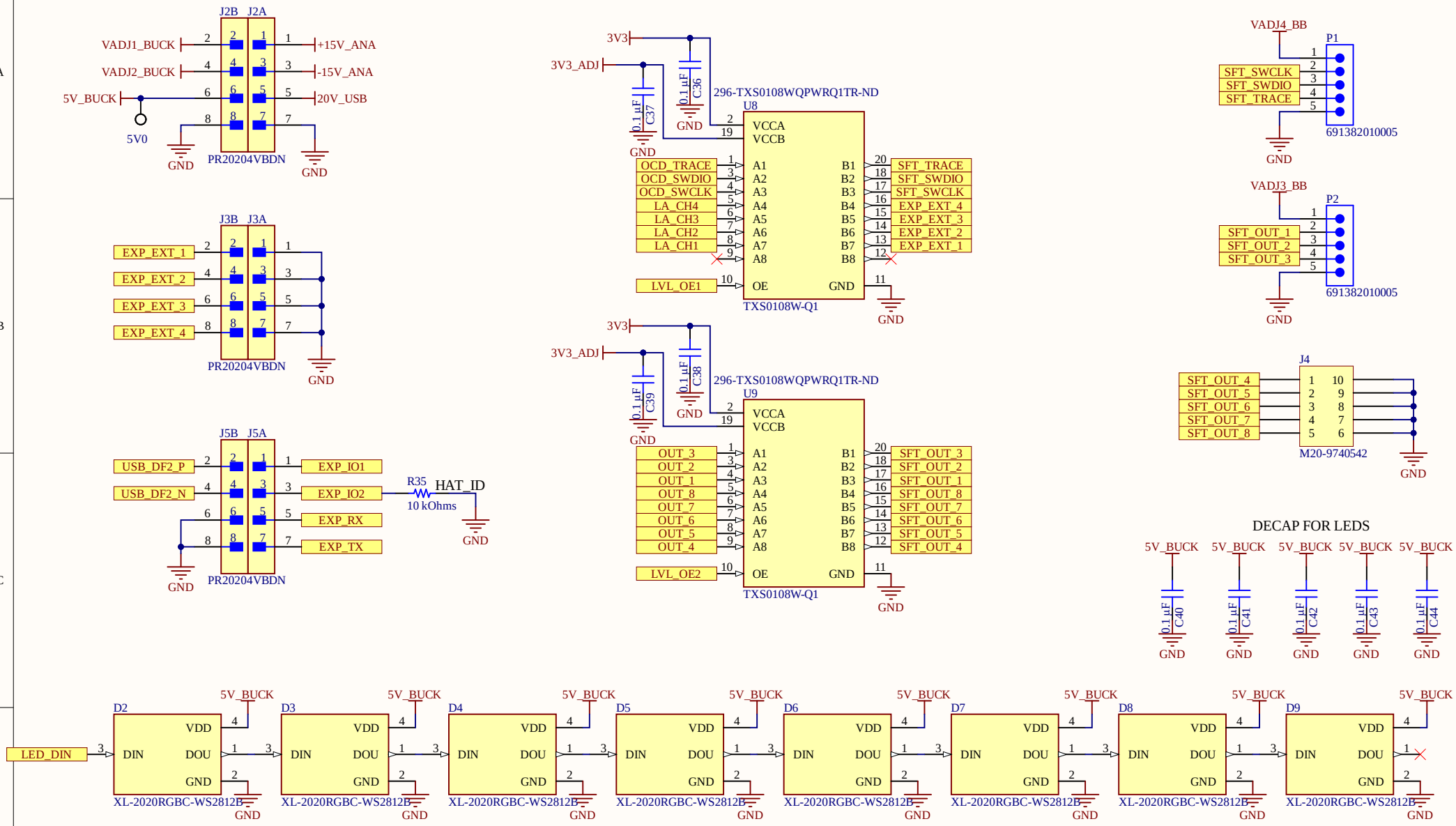

Title		
Size A4	Number	Revision
Date: 4/26/2026		Sheet of
File: C:\Users\..\IOs.SchDoc		Drawn By: